TECHNICAL DATA SHEET

Co-Extruded Decking Floor

SARO TECH

Water proof material | Weather adaptability | Environmentally friendly | Low maintenance | Does not generate termites

ISOMETRIC VIEW

Inch dimensioning

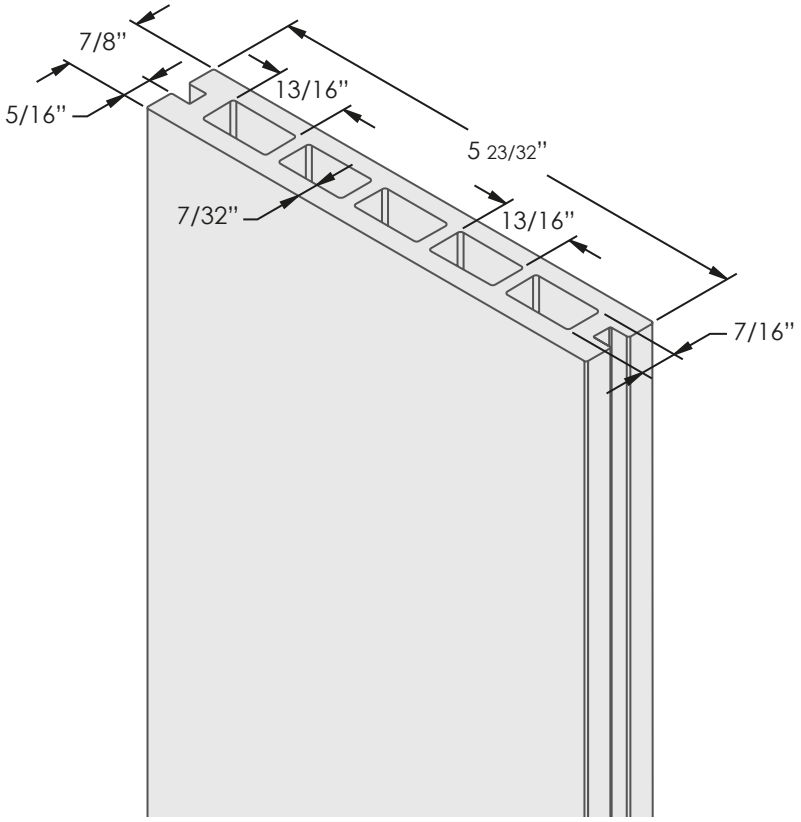

COLORS AVAILABLE
(Double sided decking floor)

A41 Teak Veining / Teak Brushed

MATERIAL SPECIFICATIONS

Material:	WPC (Wood Plastic Composite)
Use:	Outdoor
Presentation:	Box
Pieces per Box:	6 Pieces
Ft² per Box:	20.56 ft²
Ft² per Piece:	3.428 ft²
Weight per Piece:	12.12 lb

MATERIAL COMPOSITION AND PHYSICAL-CHEMICAL TESTS

Test Items	Results
Composition	50% Wood Fibres / 40% HDPE / 10% Chemical additives
Density gr/cm³	1.29 gr/cm³
Water absorption (28 days immersion)	4%
Linear thermal expansion	43.9x10–6 / C
Elastic recovery rate	81%
Formaldehyde content	No detected
Abrasion resistance	31 mg/1000r
Resistance to artificial weathering	After 2000 hours exposure △E*=0.61, Grey scale=4-5
Bending strength	15.55 MPA
Load deflection 500N	2.90 mm
Modulus of elasticity	1892 MPA
Load Capacity (Spacing 400 mm)	3751N
Impact resistance	4.2 KJ/m2
Fire classification	C-s1, d0

DIMENSIONS

H: 7/8" / W: 5 23/32" / L: 9.51'

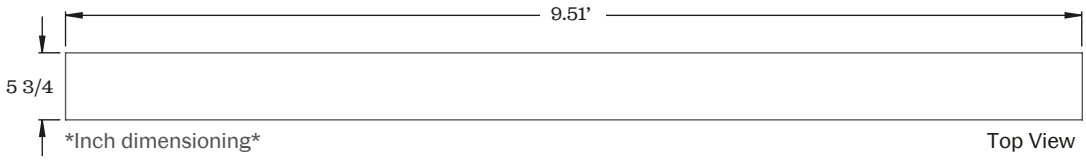

Inch dimensioning

Top View

18 YEAR WARRANTY FOR NO STRUCTURAL DAMAGE

ISO FSC CE SGS